SRAM CELL

ROLE OF SRAM

- Fastest read/write memory
  - Much faster writes than NVMs
  - Much faster reads than DRAM
- No special technology, embedded memory of choice
- Complicated to fabricate and stabilize
- Largest memory cell

SRAM CELL

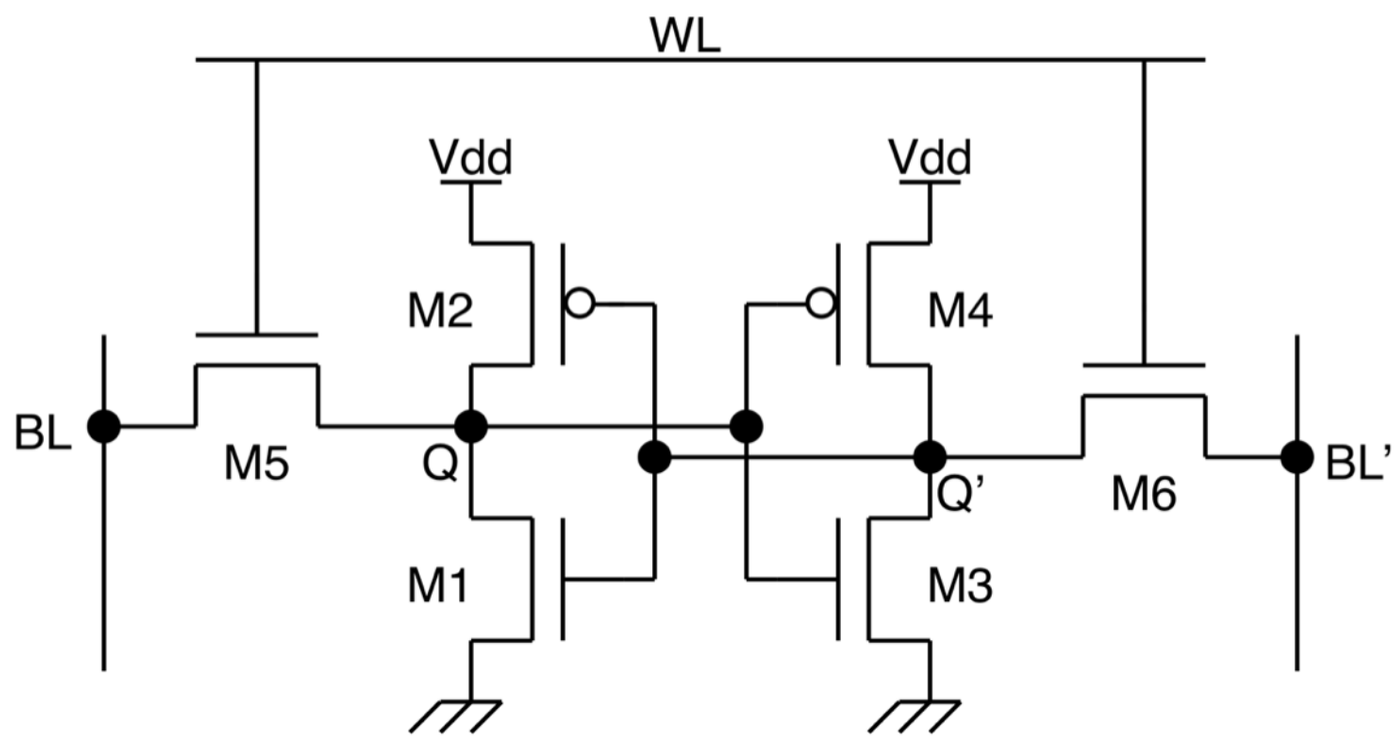

- The two bit lines do not carry independent data
- Very similar to static latch
  - With two access transistors
  - NMOS transistors are only used in the switch to reduce the number of transistors

LAYOUT OF SRAM CELL

- Bulky
  - Each cell requires NWELL for PMOS transistor
  - Many bias lines
- Bit lines are metals

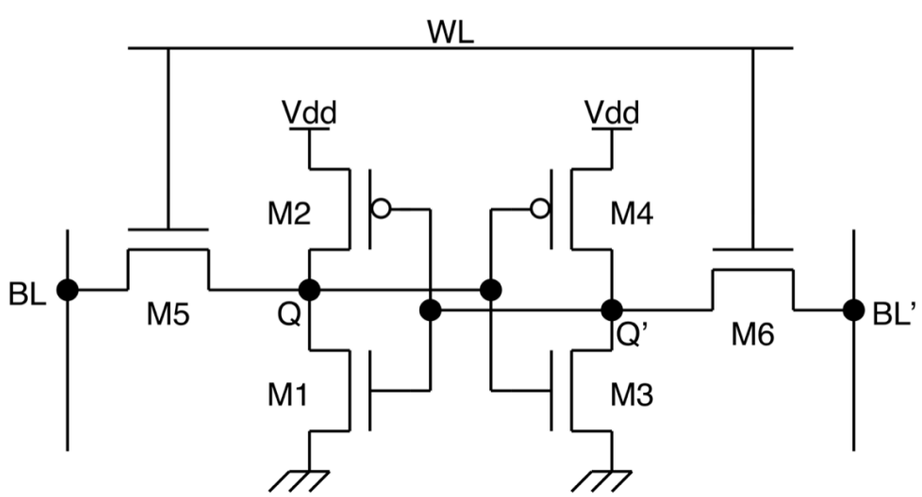

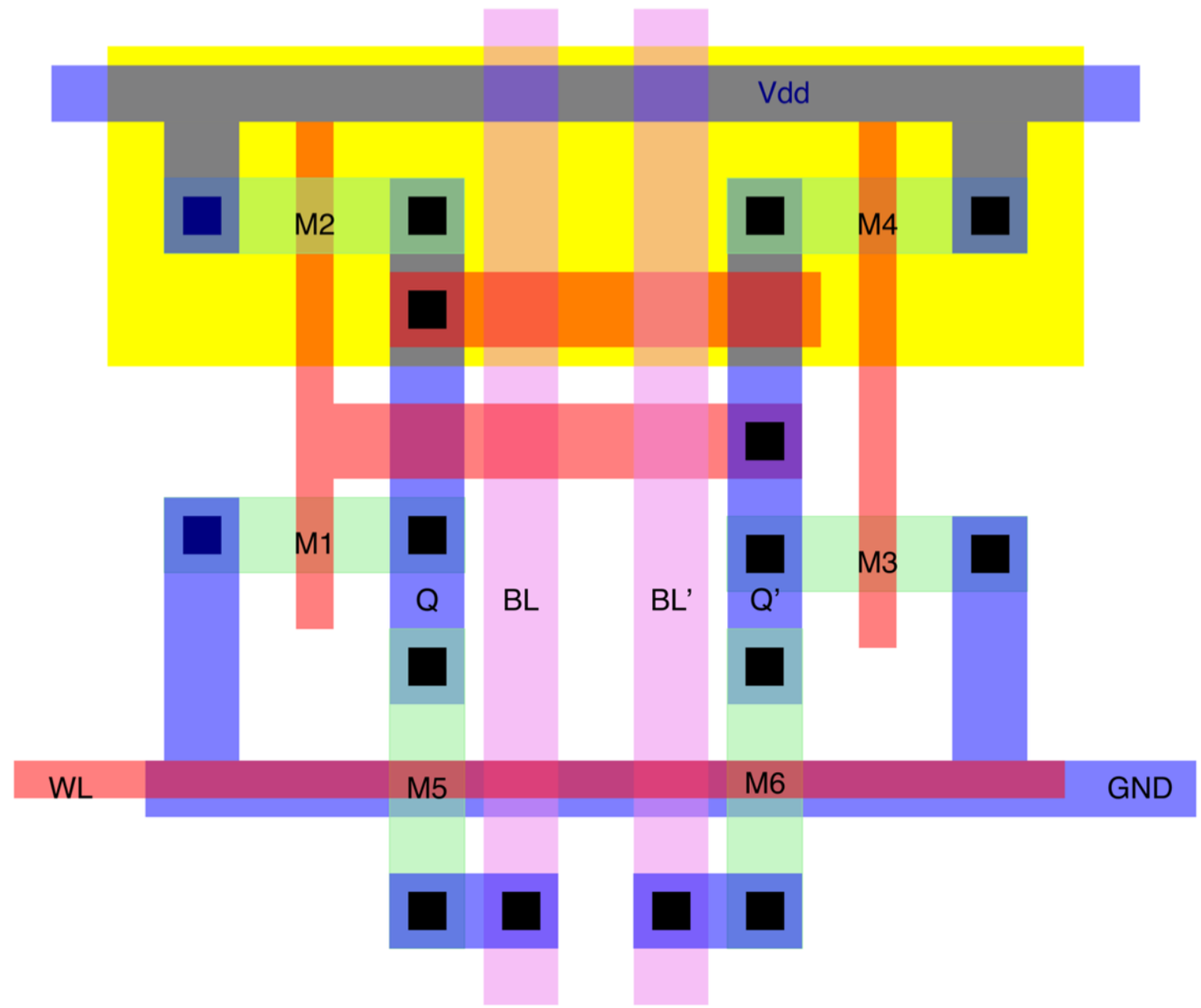

SRAM ARRAY

- Very similar to NOR ROM arrays
- Active high row decoder
- Differential operation
- Precharged loads

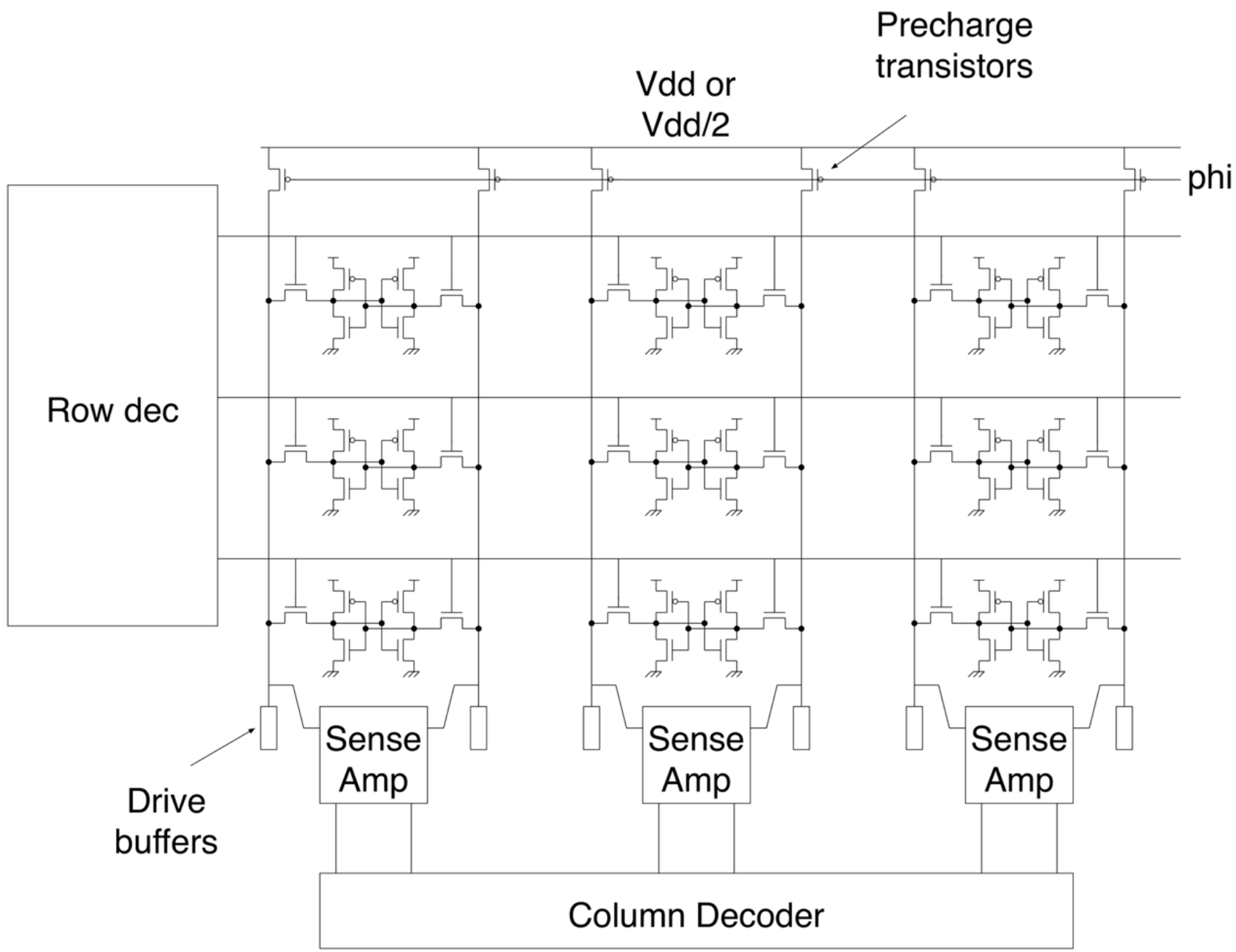

TIMELINE FOR SRAM READING

- Precharge to Vdd/2
  - Allows both bit lines to participate
- Enable WL
  - Each BL will depart in an opposite direction
  - Read the difference

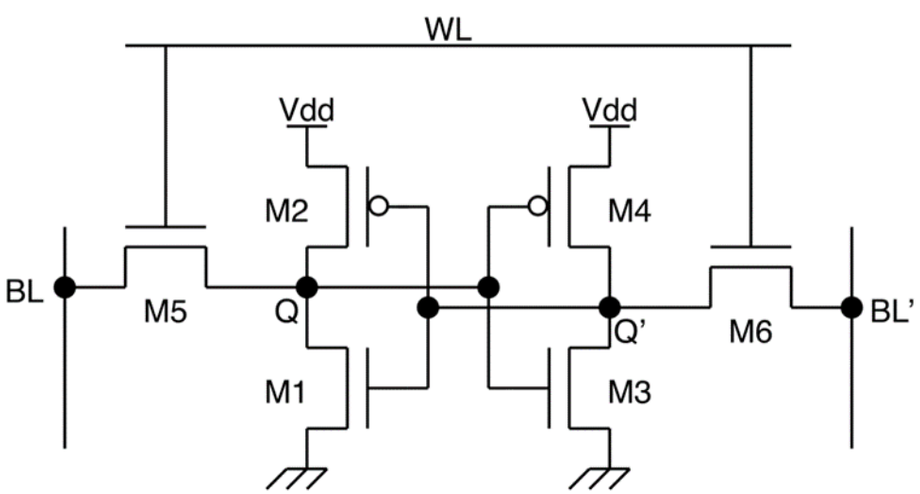

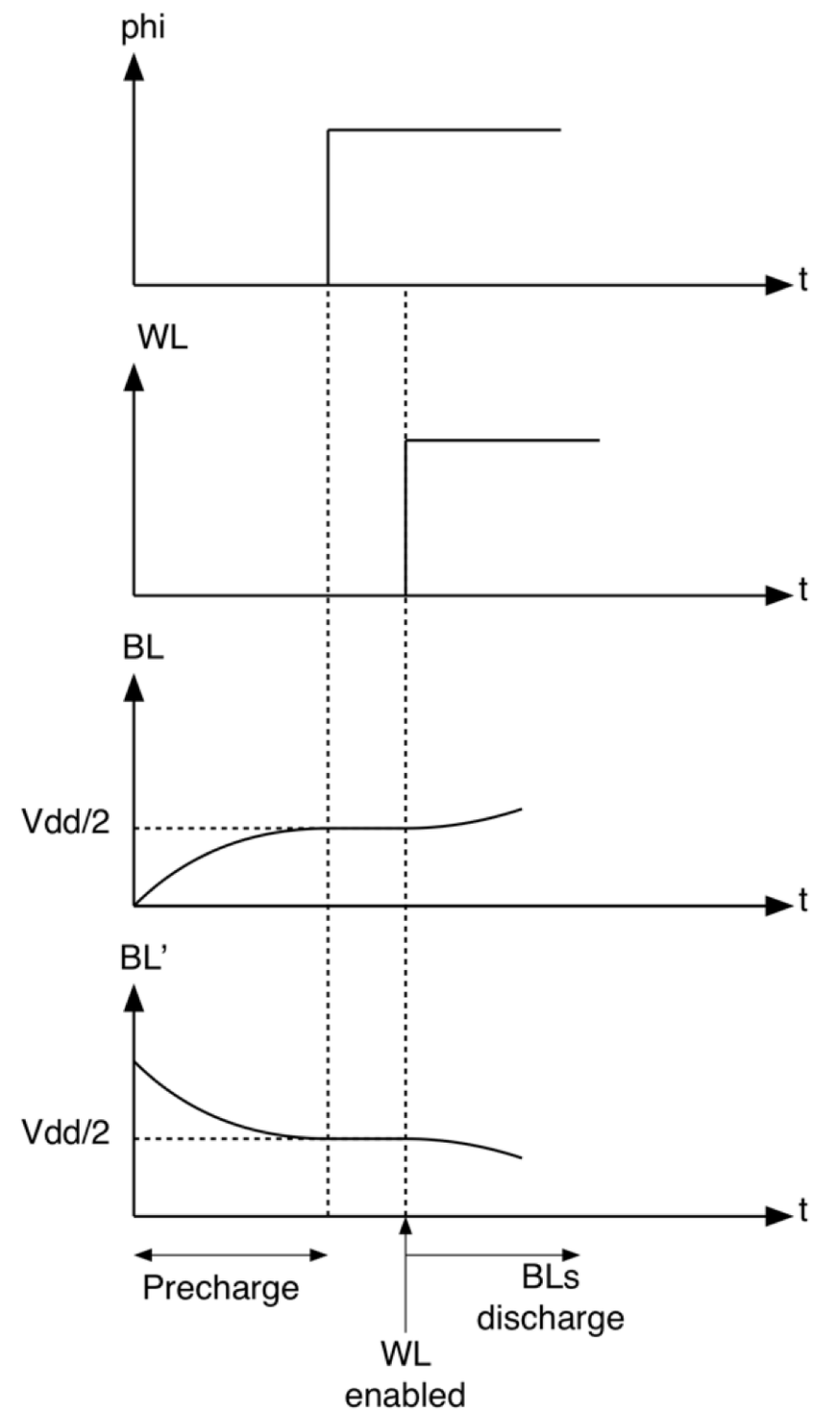

CELL BEHAVIOR WHILE READING

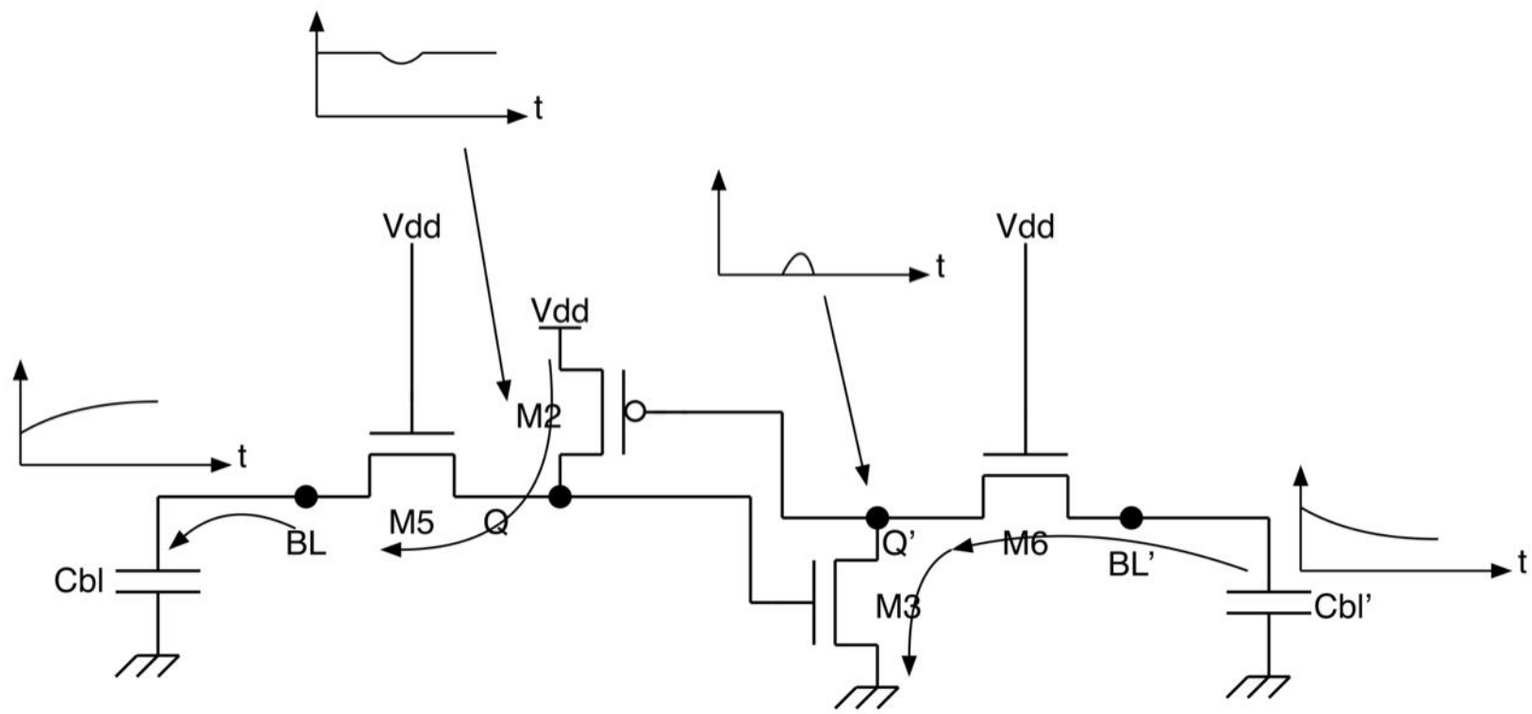

- The node that charges will cause Q to drop
- Q' will bump
- Size to disallow cell flipping state

SRAM CELL WRITING

- **Drive** BL and BL' to required values
  - Only significant when flipping the state of Q and Q'
- Enable WL
  - Q and Q' will flip state
  - Must allow the driver to overcome positive feedback drive capacity

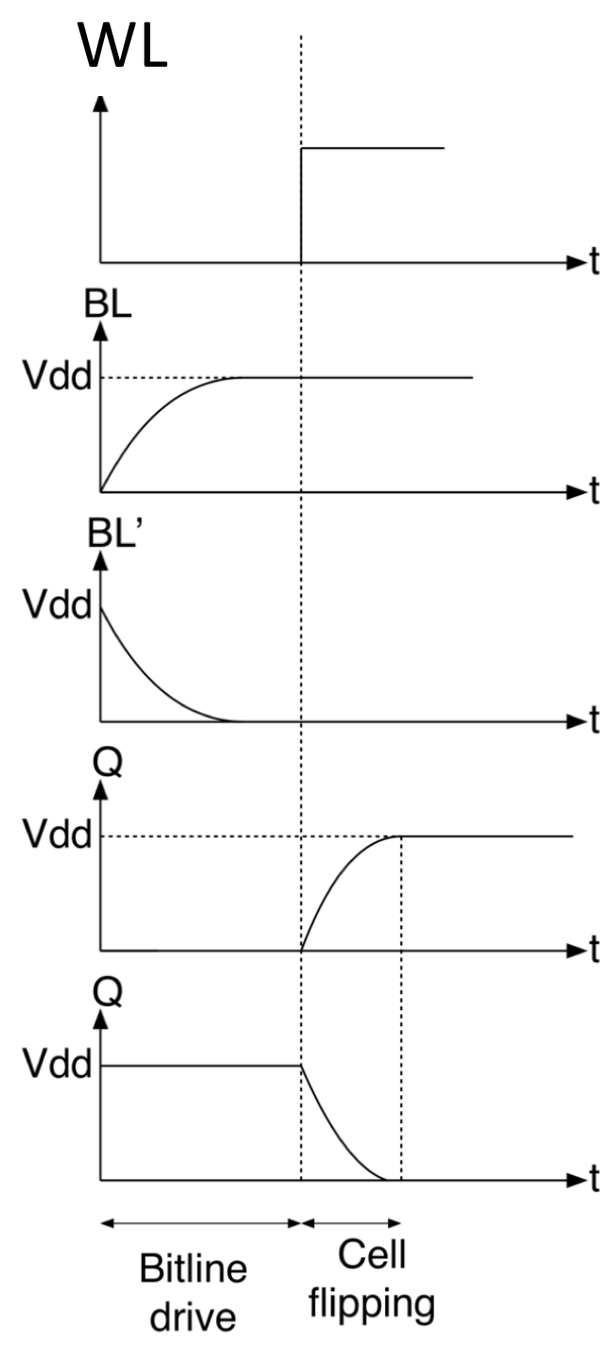

CELL BEHAVIOR WHILE WRITING

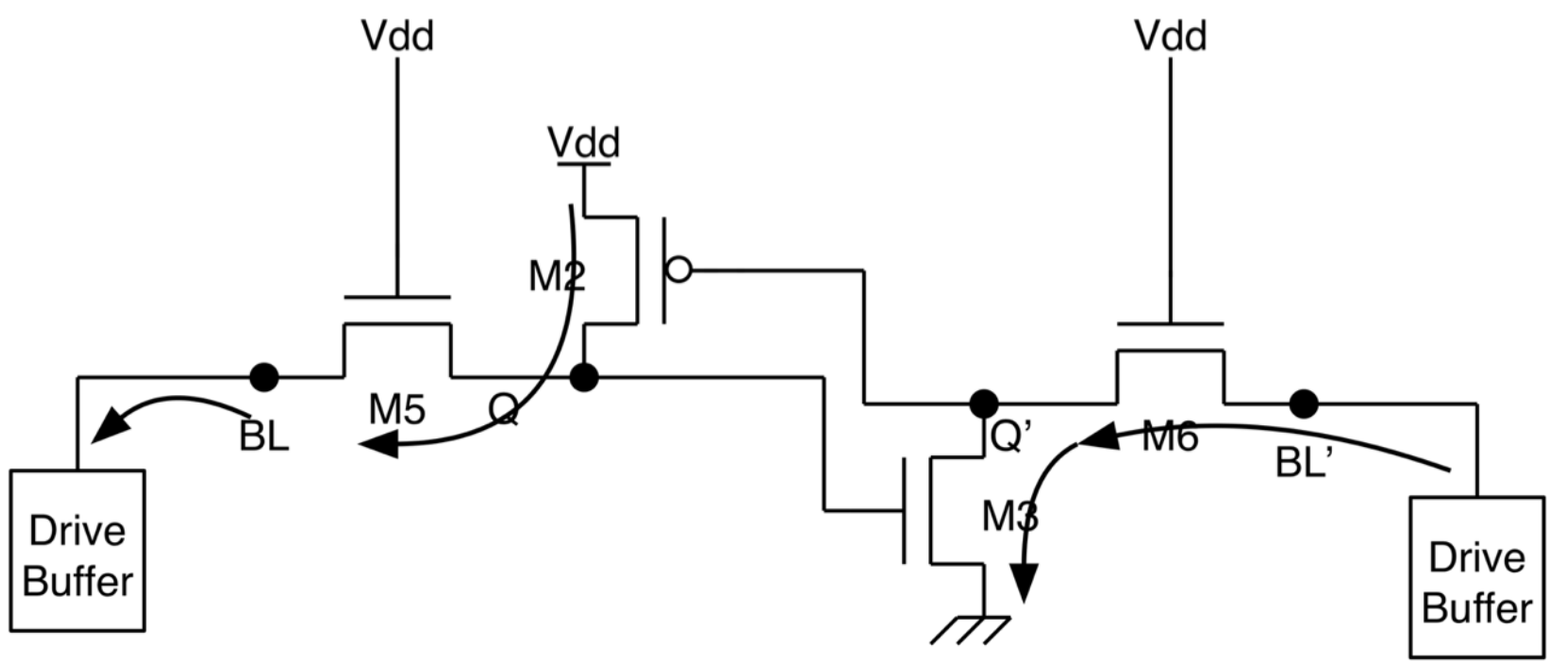

- Buffer drivers must be strong enough to pull Q and Q' in opposite direction
- Enough to cross Vm, positive feedback will then aid in flipping

THE DILEMMA OF SRAM

- The SRAM cell must be small to promote density
  - It is already six transistor, so better keep these transistors small
- Bit lines have huge capacitance due to length and loading by access transistors
- How can we avoid having to depend on the cell to discharge the entire bit line capacitor

CIRCUIT FOR CALCULATION OF SRAM DELAY

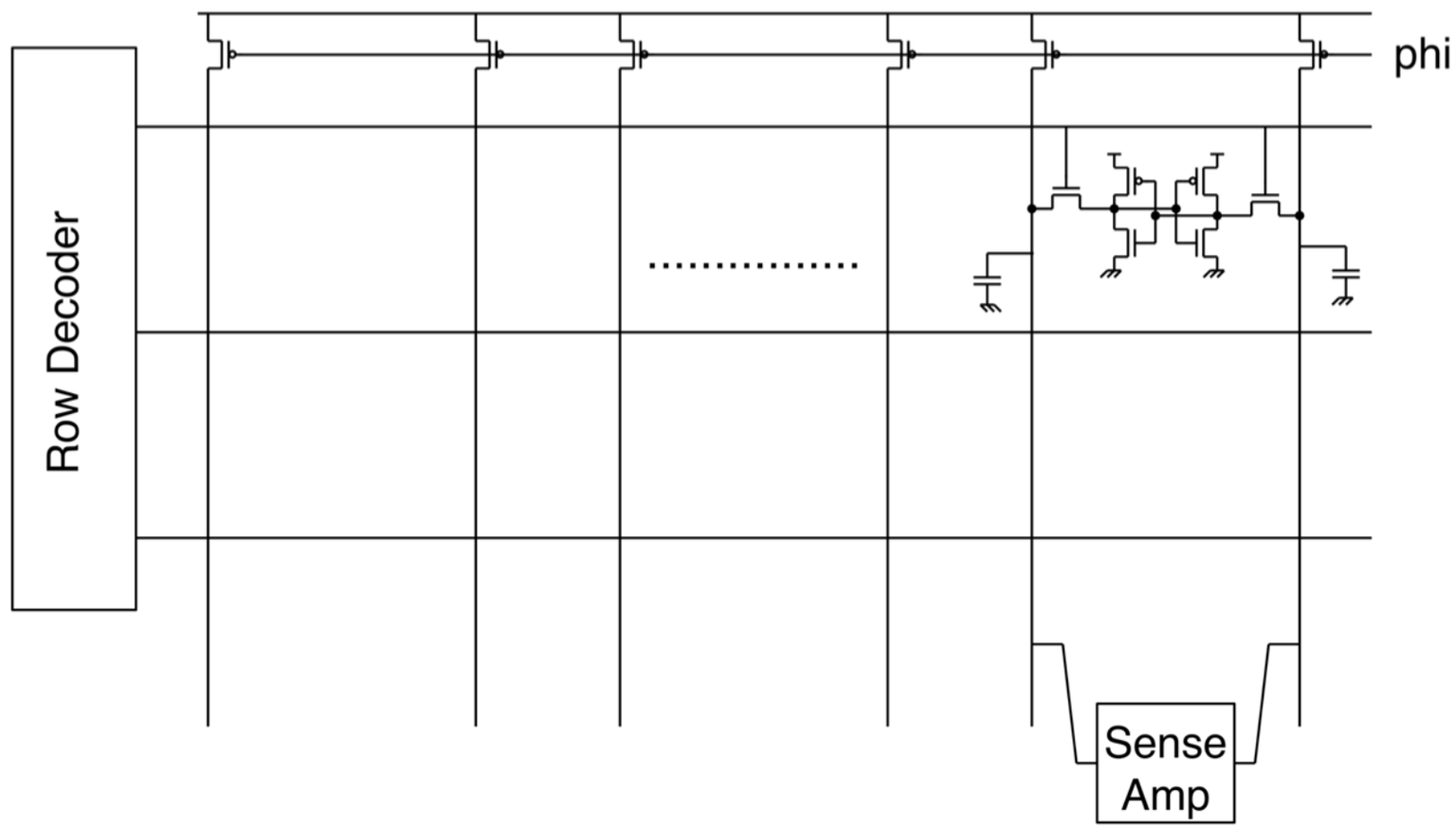

- Once the cell establishes enough differential potential
  - Fire up the sense amplifier, it will quickly do the rest